Figura 25 ZS
Figura 25 ZW

Technical features

Electrical
- Standard 230V, 50/60Hz power supply (others available on request)
- Lamp-holder type G 22 (GY 16 optional)
- 2m power supply cable (plug available on request)
- Strain relief cable clamp entry into light housing

Safety
- Automatic power cut-out by bipolar microswitch on opening the lamp-tray
- Safety mesh (optional)
- Safety bond attachment
- Filter-frame locking system
- Compliance to CE EN 60598-2-17 standards

Optical
- Independent lens zoom system 9°-25° (ZS) and 17°-36° (ZW)
- Ellipsoidal reflector in 99.99% polished and treated aluminium: 190mm diameter
- 18-leaf iris diaphragm (optional)
- 4 removable shaping shutters mounted between plates specially treated with an anti-abrasive surface
- 150mm optical tempered glass internal lens
- 230mm optical glass internal lens

Mechanical
- Die-cast extruded aluminium housing
- External black anti-scratch Epoxy Resin paint
- Black optical internal paint to give no light reflection and high-temperature resistance
- Labyrinth ventilation to avoid spill light

Operational
- A size and B size gobo holder slots covered by a sliding door to prevent the accessories from falling out and to avoid light spilling
- Exclusively designed zoom and focusing system with fast locking levers
- Double sliding door to access lenses for maintenance
- Lamp-tray hinged to the housing and totally removable for easy maintenance
- Yoke with 10mm diameter hole, adjustable height, reversible and sliding into extruded rails to balance accessories and for use in any position
- Accessory top covered by a door
- Heat insulated knobs and handles
- Quick tilt positioning with fast locking levers
- Peak/Even beam setting and fine adjustment of lamp-to-mirror position for 2000/2500W lamps
- Removable lantern and optics

FIGURA 25 ZS

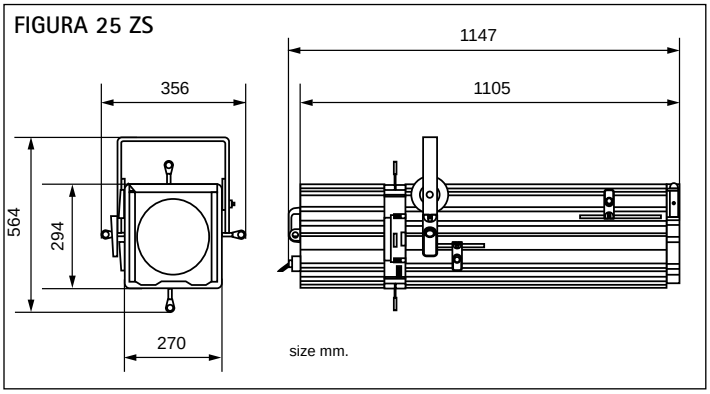

Net weigh Kg 25.1 - Gross weight Kg 30.4 - Box volume m³ 0.230

FIGURA 25 ZW

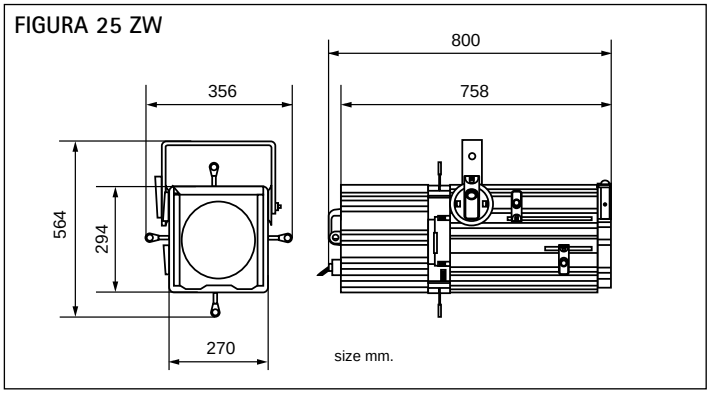

Net weigh Kg 21.3 - Gross weight Kg 27.8 - Box volume m³ 0.230

Information for ordering accessories and different versions	Code
• Figura 25 ZS (9°-25°)	FI 25 ZS
• Figura 25 ZW (17°-36°)	FI 25 ZW
Accessories	
• Colour filter frame	TC S25
• Safety mesh	R S25
• Safety bond	FUNE
• Gobo-holder for B size gobos	PGB 185
• Gobo-holder for A size gobos	PGA 185
• Iris diaphragm	DIA 20
• Iris diaphragm with black-out	DIA 20 BO
• Theatre C-hook in black painted steel for 30 to 50mm diameter tubes	GAC
• TV C-hook in die-cast aluminium (PIVOT DIN adaptor required)	A8
• 29mm / M10 spigot adaptor	PIVOT DIN
• Aluminium clamp for 50mm diameter tubes	HC / 500
• Superclamp	CLAMP
• Colour changing scroller, DMX 512 or 0/10V controlled	on request
Options	
• 100-120V lamp version	on request
• GY 16 lampholder version	on request

Lamps	Theatre/Film/TV (3200 °K)			
Type / Order code	**CP75**	**CP92**	**CP91**	**CP72 on request**
Power (W)	**2000**	**2000**	**2500**	**2000**
Lampholder	G22	G22	G22	GY16
Light-centre/base lamp distance (mm)	75	90	90	70
Luminous flux (Lumen)	50000	50000	65000	50000
Life time (hours)	480	400	450	480
Colour temperature (°K)	3200	3200	3200	3200
Supply voltage (V)	230	230	230	230
Nominal current (Amp.)	8.6	8.6	10.8	8.6