9PDOT7

HI-RES SMART 16mm SQUARE RGB PIXEL CF DOTS (5V): 100mm PITCH, STRING OF 50

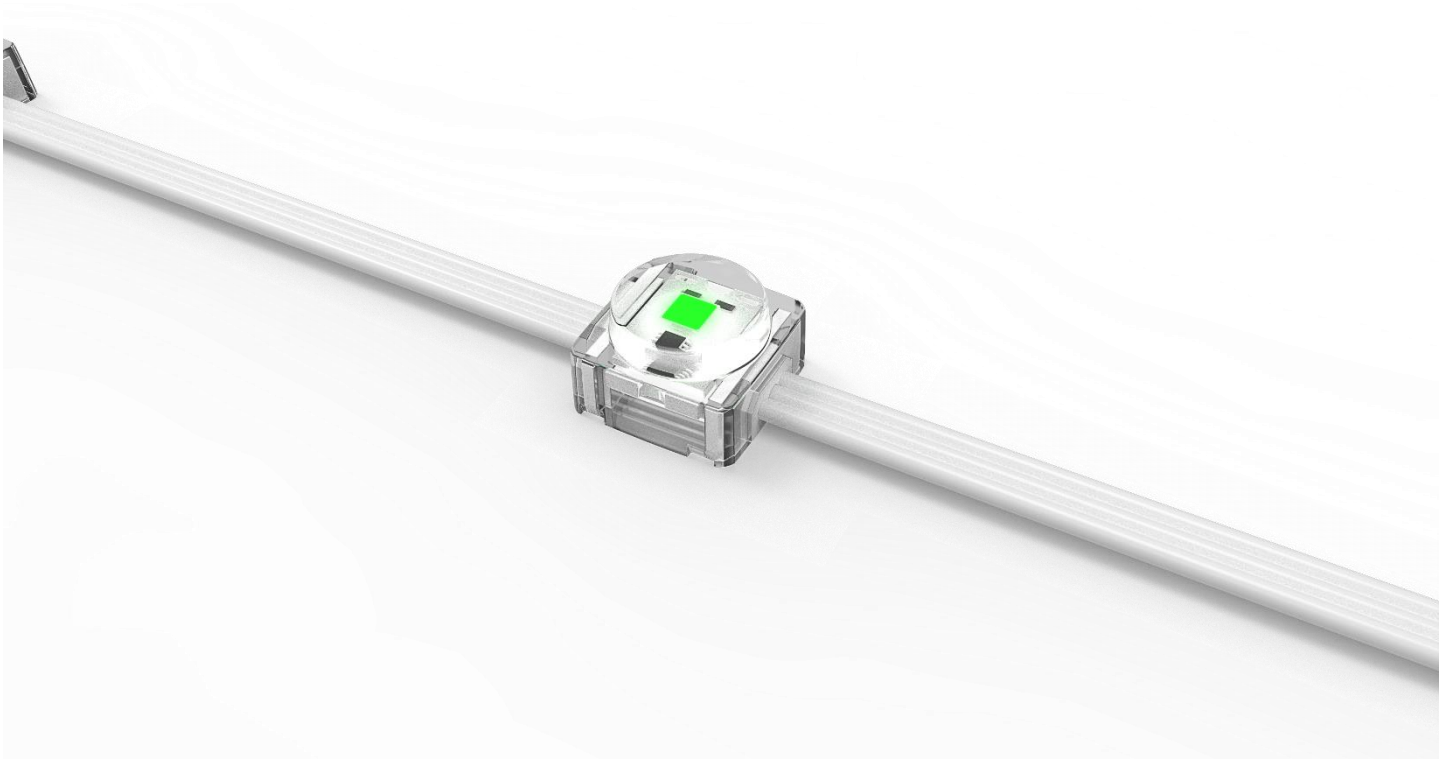

General Information

- Auto addressing
- This device will require an external DC power supply (not included) for normal operation.

Features

- 100mm Pitch
- Supplied in a string of 50 dots with IP rated connectors at each end
- Compatible with Pixie driver, Pixelator Mini and Pixelator (revB only).
- Clear flat lens
- 12-bit colour resolution.
- Each pixel can achieve over 16.7 million colours with a scan of up to 400Hz
- Easy wall or cable mounting using the ENTTEC 9PDOT7 mounting clip accessory.
- Built-in data signal reshaping circuit
- 5V DC input supply voltage
- Suitable for indoor and outdoor use
- IP67 Rated
- On-board thermal fuse within each dot
- Thick copper cabling to combat the effect of volt drop
- 3-year warranty

Specifications

Item	Value
Input Voltage	5 VDC
Power	0.3W max
LED Source	1pcs SMD3535
Lumens	5.58 lm
Efficacy	18.59 lm/Watt
IP Grade	IP67
Channel Footprint (per DOT)	3 (8-bit) or 6 (16-bit)

Color Range	16.7 million additive RGB colours
Protocol	ENTTEC 9PDOT
LED Ordering	R-G-B
Color Resolution	4096 (12-bit)
Beam Angle	120° (clear flat lens)
Pixel Pitch	100mm (10/m)
Size	16 x 16 mm
Weight	0.32 kg (string of 50 dots)
Working Temp	-20°C to +50°C
Control	PWM

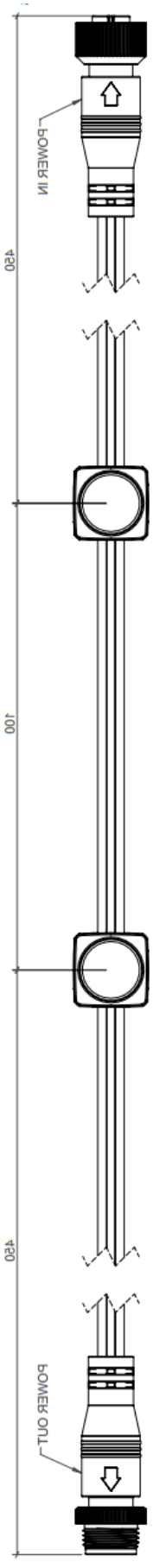

Voltage Drop

- Based on 100mm spacing, the maximum length that can be run without incurring voltage drop issues are 100 dots.
- Strings longer than 100 dots, will require power to be re-injected.

Physical Dimensions (9PDOT7)

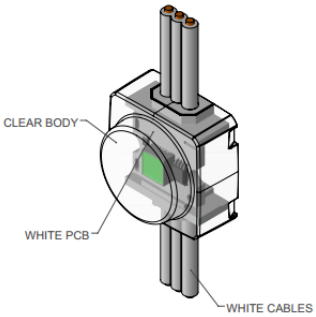

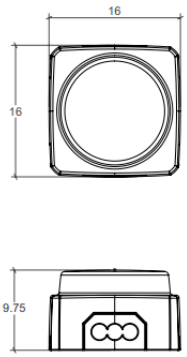

Mounting Clip Specifications

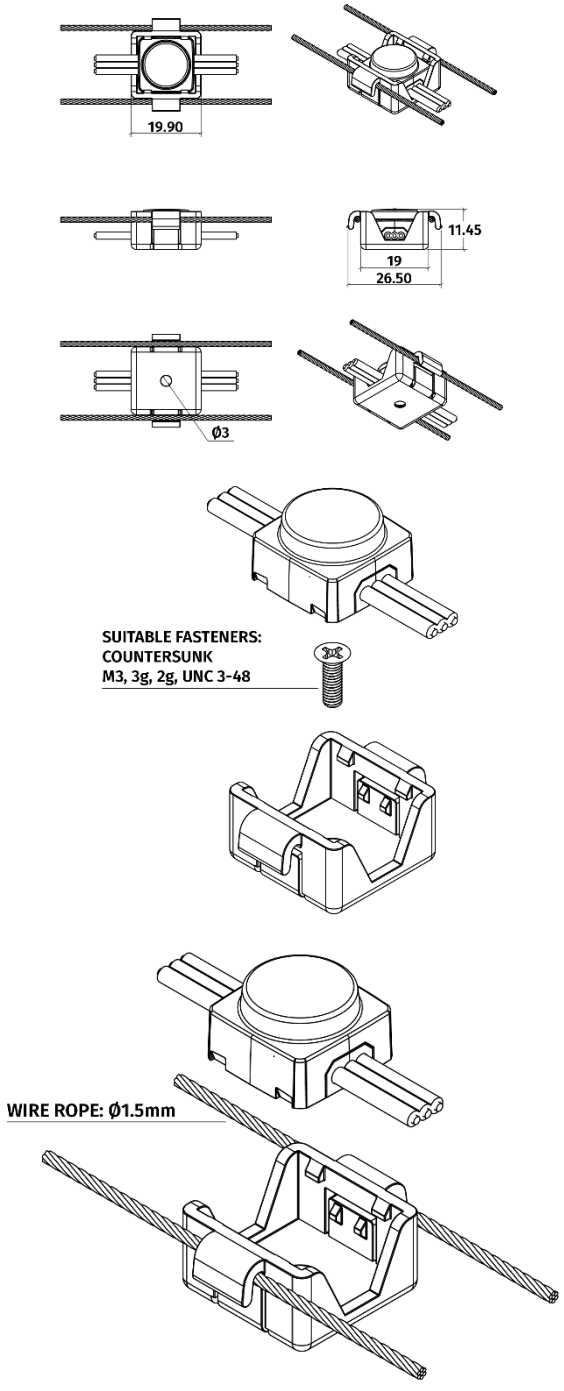

Connecting to a PLink injector:

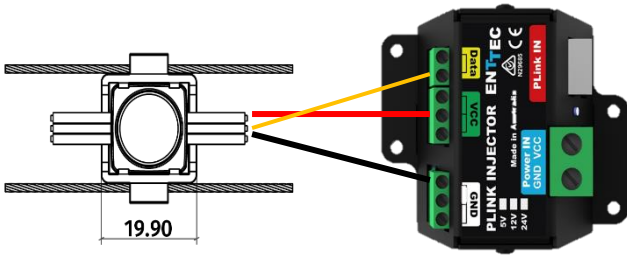

Cable	PLink Terminal
Thick White cable	VCC+
Thin White Cable	Data
Thick White Cable	GND

Ensure your selected PLink is of a voltage rating that matches your selected 9Pdots. Ensure that the PLink has been connected in such a way to ensure the data is flowing from the Plink down the string of Dots.

Note: For use of PLINK system, please refer to the PLINK datasheet on the ENTTEC website.

Ordering Information

ENTTEC 9PDOT7 and related products can be ordered from our website or through your ENTTEC dealer using the following part numbers:

P/N	Description
9PDOT7	HI-RES SMART 16mm SQUARE RGB PIXEL CF DOTS (5V): 100mm Pitch, string of 50

Recommended Products

P/N	Value
9PDOT7-CLIP	9PDOT7 Compatible Mounting Clips
9PDOT-CBL-A	2000mm white cable with Male IP connector
9PDOT-CBL-B	2000mm white cable with Female IP connector
70581-ARC	ENTTEC LED Mapper Software – Architectural (512 Universes)
70581-PRO	ENTTEC LED Mapper Software – Professional (96 Universes)
70581-STU	ENTTEC LED Mapper Software – Student (16 Universes)

Due to continuous improvements and innovations of all ENTTEC products, specifications and features are subject to change without notice.
Email: **sales@enttec.com**
Website: **www.enttec.com**